Parasite Phaser

by F. Lyxzén - www.parasitstudio.se

Not for commersial use!

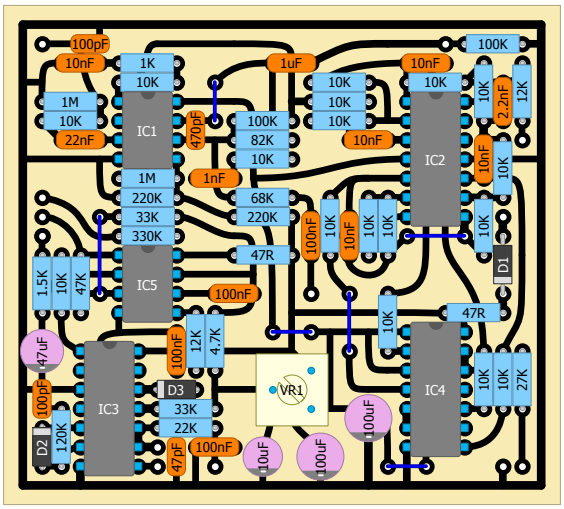

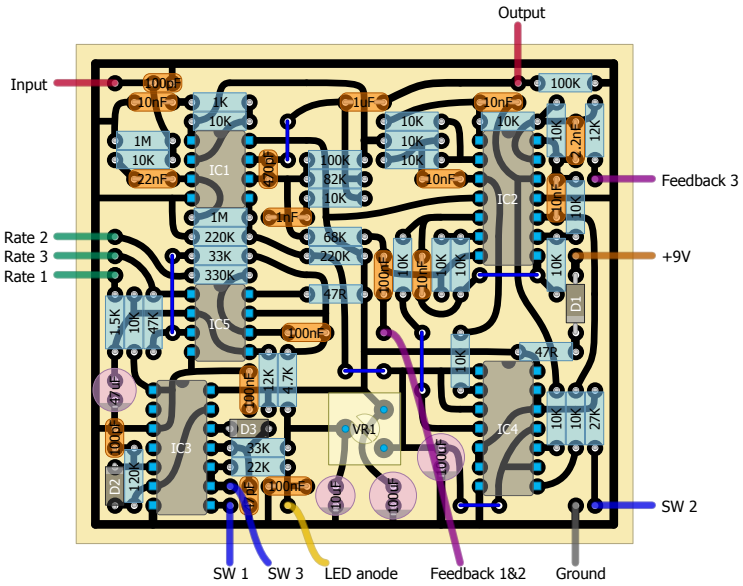

Rate: B100K
Feedback: C50K
SW: SPDT on/on

VR1 (Bias): 20K trimpot
D1: 1N5817
D2 & D3: 1N4148

IC1: TL072
IC2: TL074
IC3: CD40106

IC4: CD4066
IC5: TL062 or TL022

LED cathode to ground

Set the Bias trimmer for maximum effect before it start to thump or tick
Try both switch positions and different rates when setting the bias to ensure a quiet operation

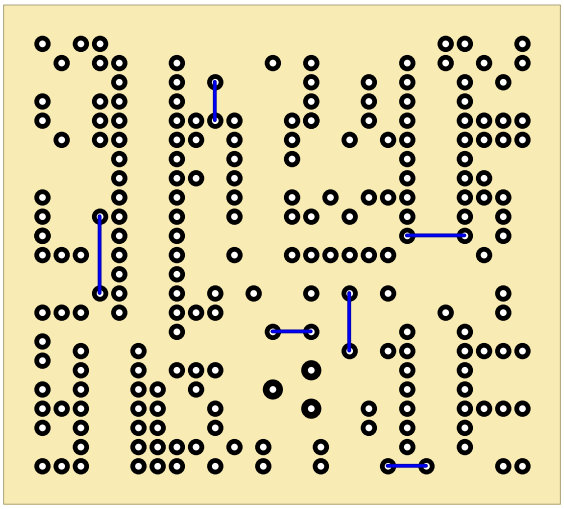
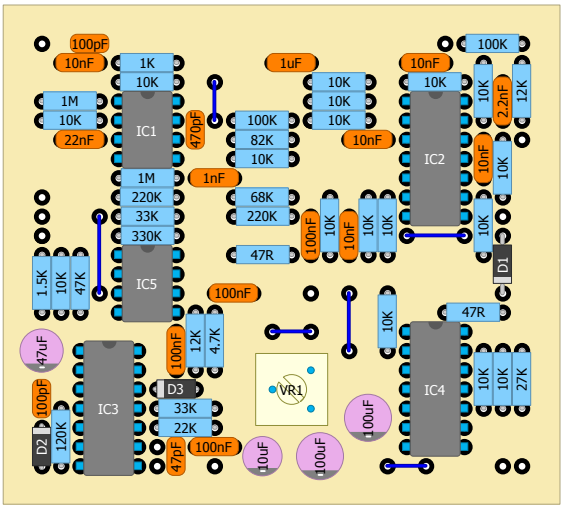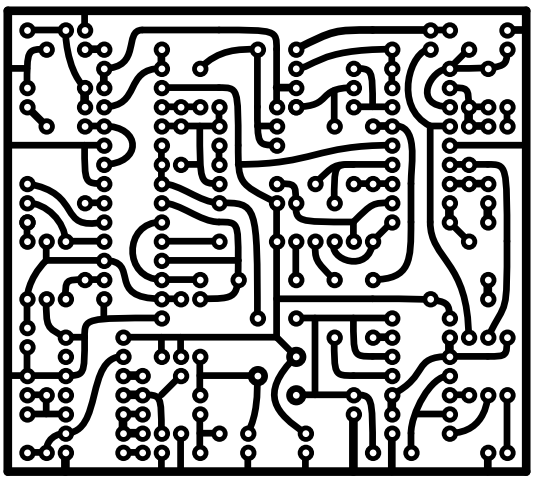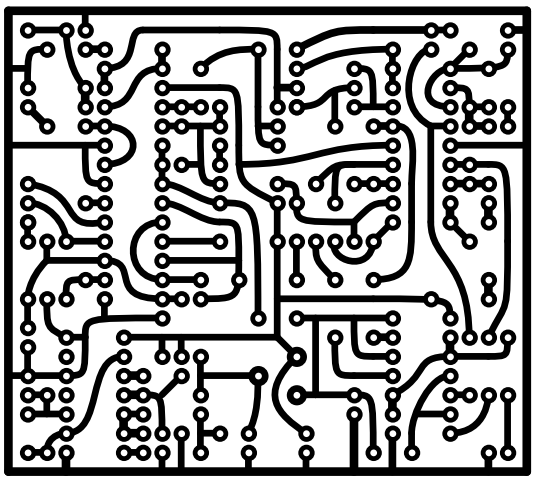
6 jumpers