QUANTUM DEFRAKULATOR

Parasit Studio

www.parasitstudio.se

This is a Drone Synth with 3 oscillators
The LFO turns oscillator 1 into a 4-step sequencer

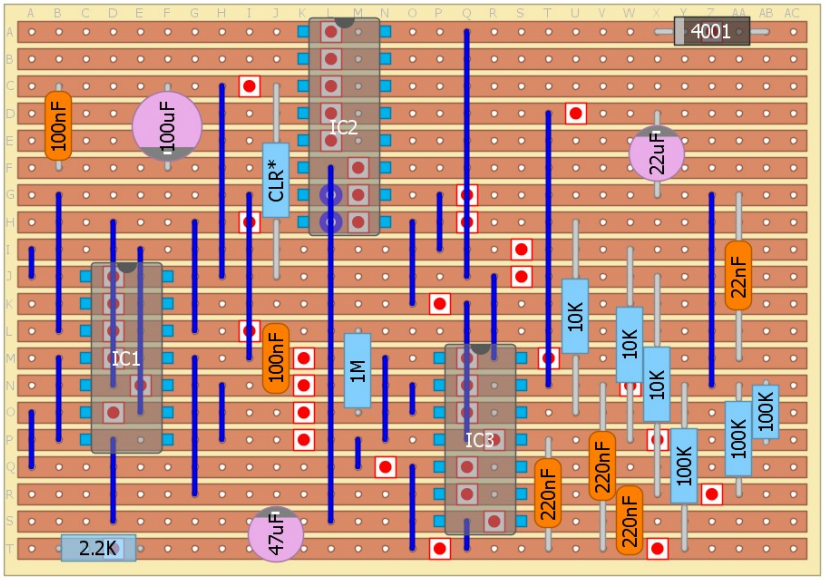

* Current Limiting Resistor for the sequencer LED's
Connect the LED's cathodes to ground

IC1 = CD4013
IC2 = CD4052
IC3 = CD40106

LFO SWITCH:
SPST momentary

POTS:
Sequencer 1: B100K - becomes the Frequency pot for the first oscillator when the LFO is OFF
Sequencer 2: B100K
Sequencer 3: B100K
Sequencer 4: B100K

Frequency 2: B100K
Frequency 3: B100K

Oscillator 1 Level: B100K - pin 1 to ground
Oscillator 2 Level: B100K - pin 1 to ground
Oscillator 3 Level: B100K - pin 1 to ground

Rate: C50K
Filter: C50K - pin 1&2 to ground

29 x 20, 27 links, 44 cuts

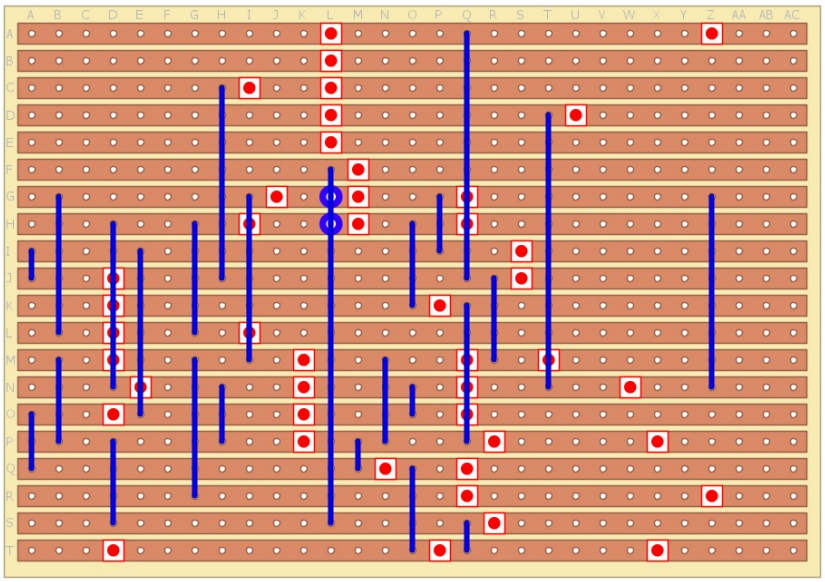

= double links